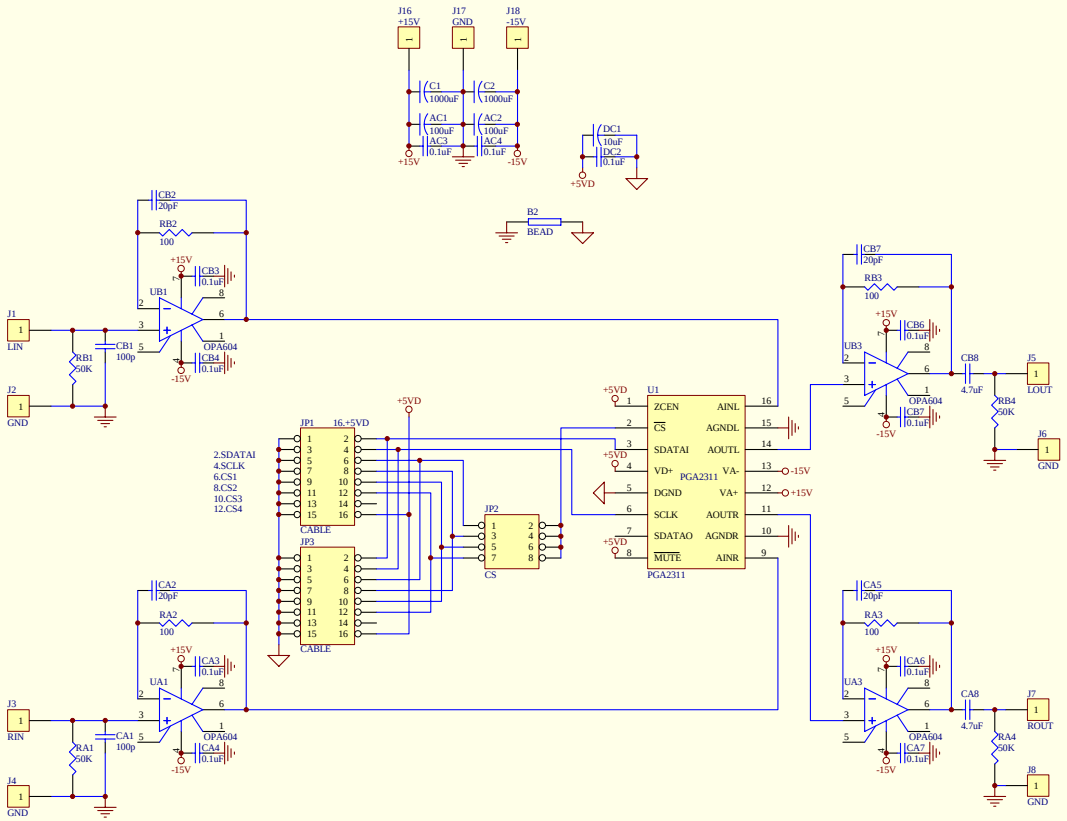

Title		
Size A3	Number	Revision
Date: 16-Feb-2005	Sheet of	
File: C:\backup\c\AUDIO2\James1\James.ddb	Drawn By:	